Primy
Stainless Steel
Kitchen & Bathroom

Edition: 2022-03-17

1 90° connector
2 Gasket
3 Connector
4 Check valve
5 c-ring
6 o-ring
7 Foot nut
8 Connector
9 Fastening plate
10 Body
11 Fixing screws
12 Diverter
13 Lock nut
14 Limiter
15 Hex screws
16 Limiter screws
17 Diverter cover
18 Splined extender
19 Screw
20 Decorative cover ring
21 o-ring
22 Washer
23 Handwheel bar
24 Handwheel
25 Inner hex screw
26 Decoration rubber
27 Handwheel bar
28 Button spring
29 Thermostatic handle
30 Handwheel plug
31 Screw
32 Temperature limiter
33 Spline bushing
34 Thermostat cover
35 Thermostat lock nut
36 Thermostatic cartridge
37 Fixing screws
38 Gasket
39 Decorative cover ring
40 Hand shower holder pipe
41 Hand shower holder pipe
42 Screw
43 Hand shower holder pipe
44 Hose
45 Tattle pipe cover
46 o-ring

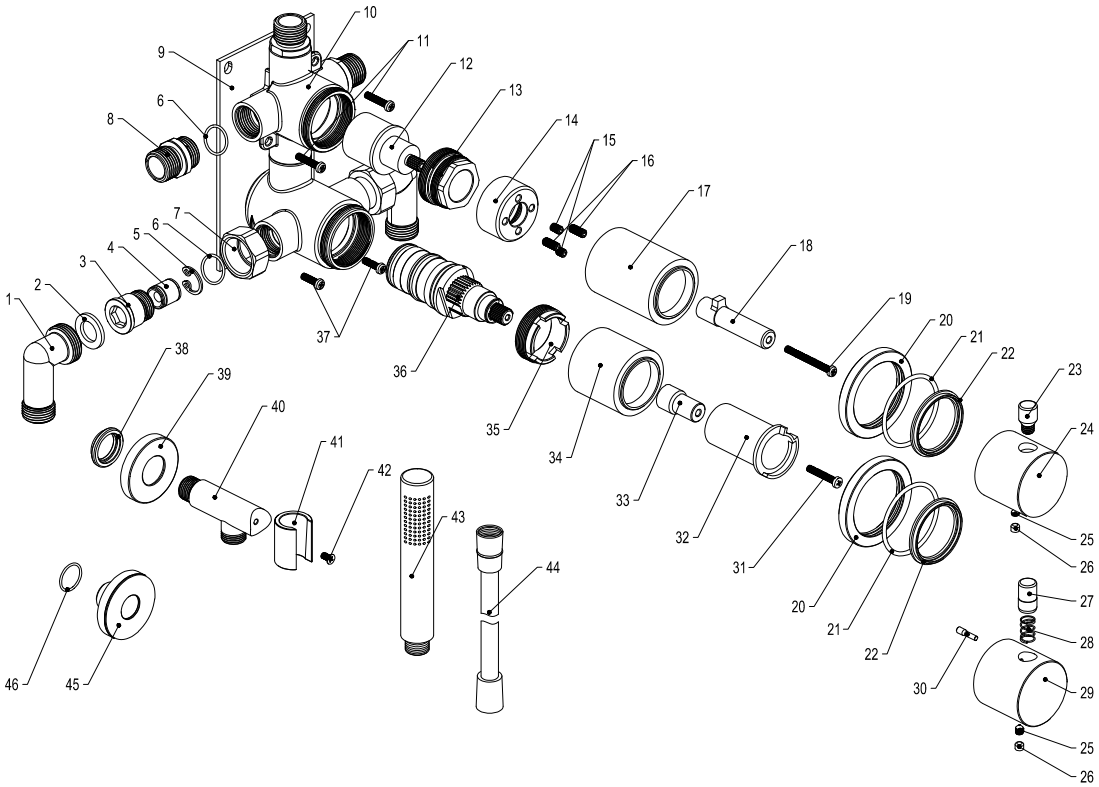

Harmonized mixer body and peripherals Scrap

Art no: 21152 **RSK:** 8351514

SCANDTAP
BATHROOM CONCEPTS

Scandtap AB, Olofsdalsvägen 21, 302 41 Halmstad, Sweden
info@scandtap.com, www.scandtap.com

Vi har produkter anpassade till Branschregler Säker Vatteninstallation 2021:1.

Typgodkännande Nr: 1786-1787